ORDER NO. RD8007-1803C

Service Manual

Radio

FM/LW/MW/SW 4-BAND
PORTABLE RADIO

RF-1405LBS

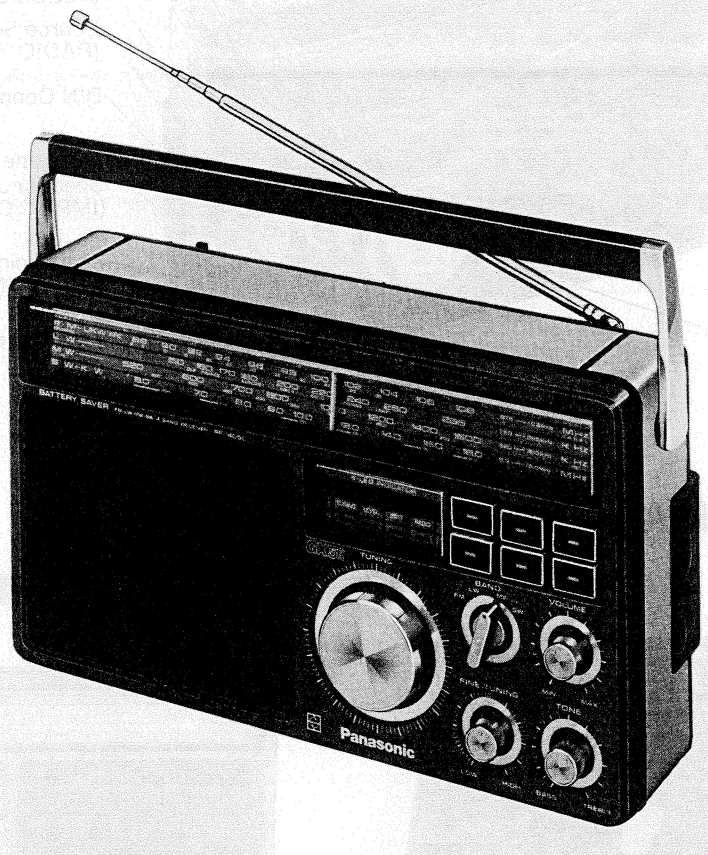

SPECIFICATIONS

Frequency Range:	FM 87.5~108 MHz LW 150~285 kHz (2000~1060m) MW 520~1610 kHz (577~186m) SW 5.9~18 MHz (50.8~16.7m)
Intermediate Frequency:	FM 10.7 MHz AM (LW, MW & SW) 455 kHz
Sensitivity:	FM 1.8μV (−10 dB Limit Sens) LW 100μV/m for 50 mW Output MW 40μV/m for 50 mW Output SW 3.5μV for 50 mW Output
Power Source:	AC 110~125/220~240 V 50/60 Hz or DC 6 V (Four "C" Size Flashlight Batteries) (National UM-2 or equivalent)
Power Consumption:	9 W (AC Only)
Power Output:	2 W (DC Max) 2 W (MPO)
Speaker:	10 cm (4") PM Dynamic Speaker
Dimensions:	10½"(Wide)×6¼"(High)×3 3/16"(Deep) (266×158×80)mm
Weight:	3 lb. 8.4 oz. (1.6 kg) without batteries
Impedance:	Speaker.....8Ω Earphone Jack.....8Ω

Specifications are subject to change without notice.

National Panasonic

Matsushita Electric Trading Co., Ltd.
P.O. Box 288, Central Osaka, Japan

LOCATION OF CONTROLS AND COMPONENTS

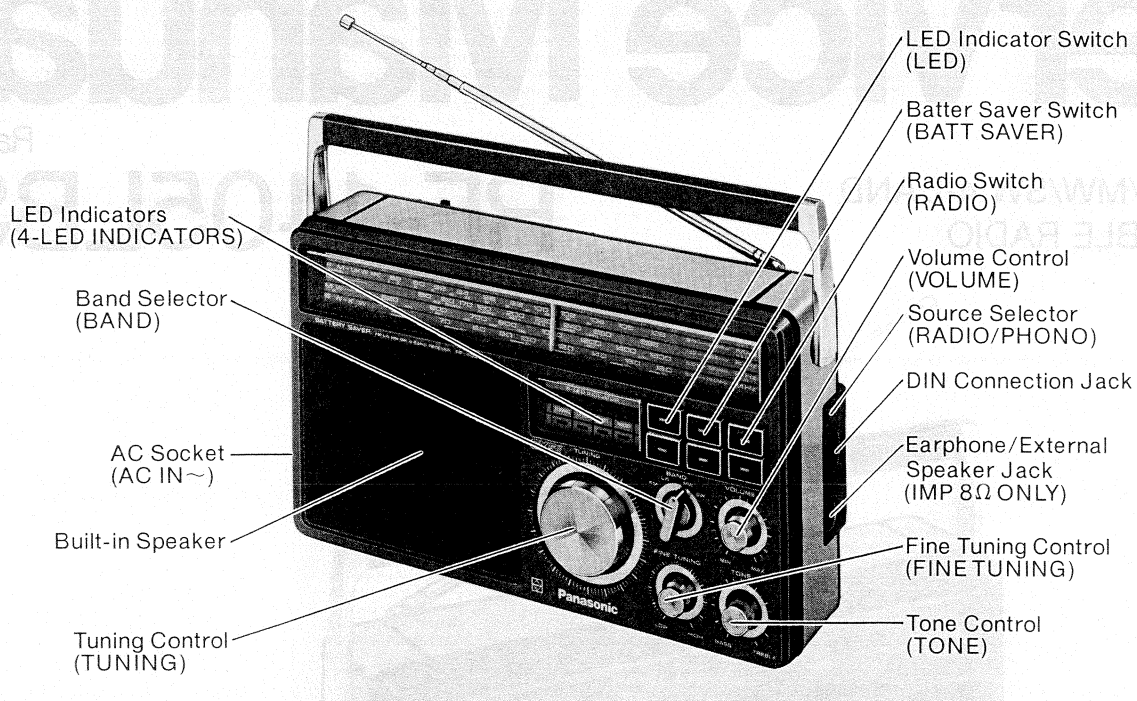

Fig. 1

DISASSEMBLY INSTRUCTION

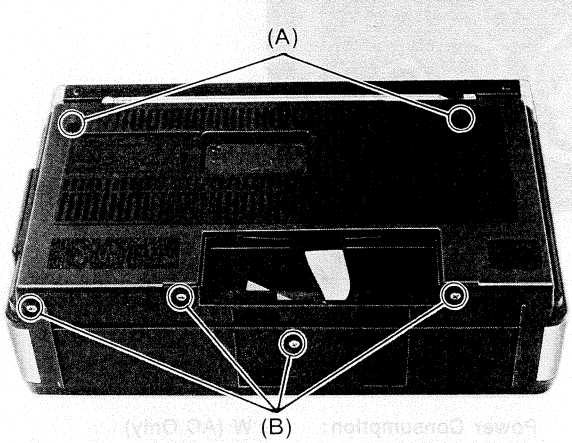

Fig. 2

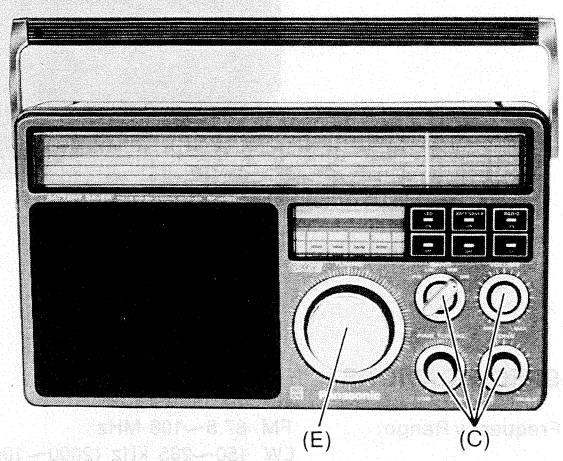

Fig. 3

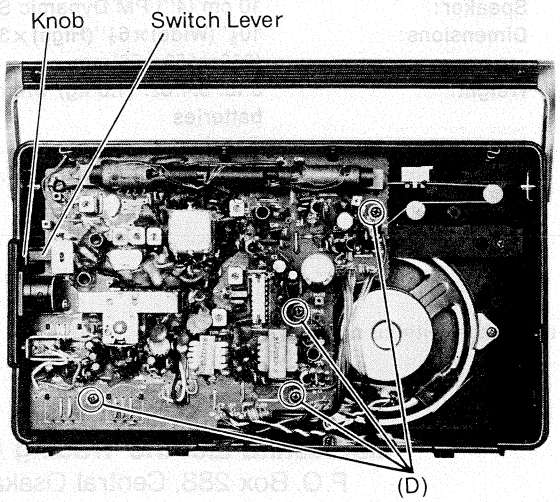

Fig. 4

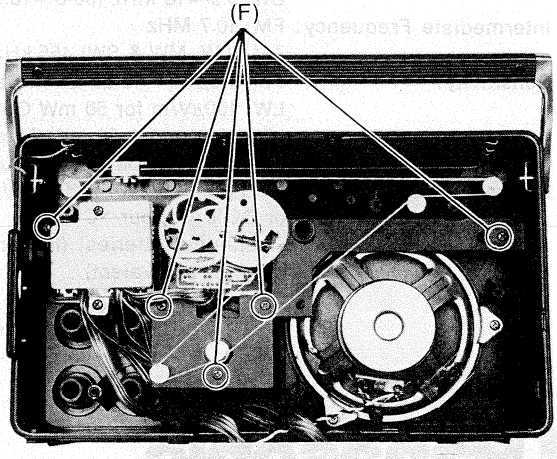

Fig. 5

DIAL THREADING

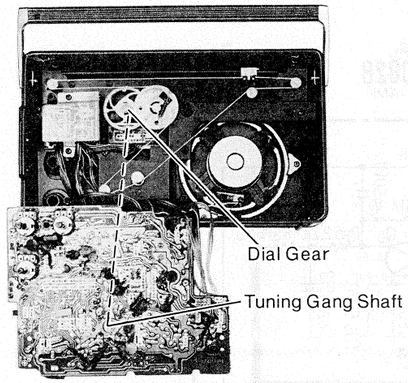

Fig. 6

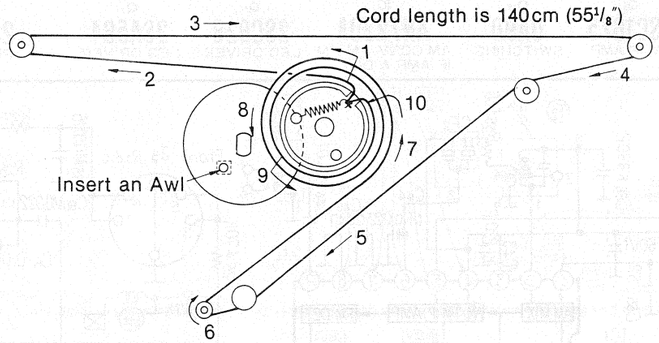

Fig. 7

Procedure	To remove—.	Remove—.	Shown in Fig.—.
1	Printed Circuit Board ※1, 2, 3	Screws (3×45) .....(A)×2	2
2		Screws (3×10) .....(B)×4	2
3		Knobs .....(C)×3	3
4		Red screws (3×12) .....(D)×4	4
5	Dial Chassis	Knob .....(E)×1	3
6		Screws (3×12) .....(F)×5	5

Notes:
※1. Turn tuning gang shaft to fully counter-clockwise.
※2. Insert the tuning gang shaft in the hole of dial gear as shown in fig. 6.
※3. Insert the switch lever in the knob as shown in fig. 4.

ALIGNMENT POINTS

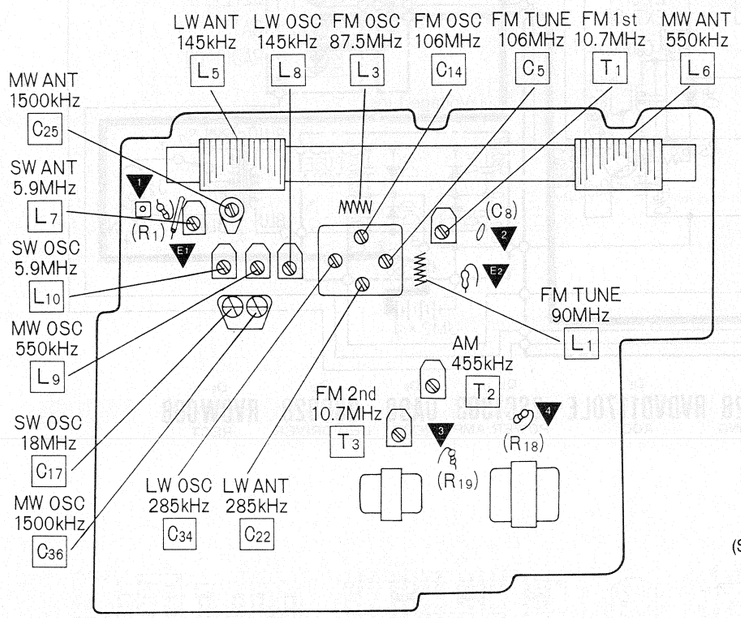

Fig. 8

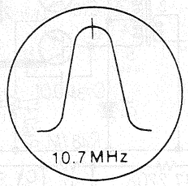

Fig. 9

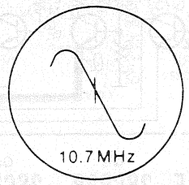

Fig. 10

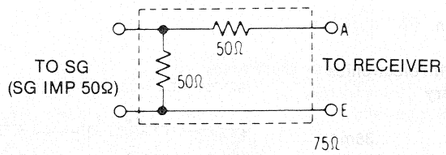

Fig. 11 FM Dummy Antenna

ALIGNMENTS

ALIGNMENT INSTRUCTION

READ CAREFULLY BEFORE ATTEMPTING ALIGNMENT

1. Set radio switch to ON.
2. Set volume control to maximum.
3. Set tone control to treble.
4. Set band switch to LW, MW, SW or FM.
5. Set LED indicator switch to OFF.
6. Set source selector to radio.
7. Set power source voltage to 6 V DC.
8. Output of signal generator should be no higher than necessary to obtain an output reading.

LW, MW, AND SW ALIGNMENT

	BAND	SIGNAL GENERATOR or SWEEP GENERATOR: CONNECTIONS	SIGNAL GENERATOR or SWEEP GENERATOR: FREQUENCY	RADIO DIAL SETTING	INDICATOR (ELECTRONICS VOLTMETER or SCOPE)	ADJUSTMENT	REMARKS
			AM IF ALIGNMENT				
(1)	MW	Fashion loop of several turns of wire and radiate signal into loop of receiver.	455 kHz 30% Mod. at 400 Hz	Point of non-interference.	Output meter across voice coil.	T_2 (AM IFT)	Adjust for maximum output.
			LW-RF ALIGNMENT				
(2)	LW	〃	145 kHz	145 kHz [24.11mm (31/32")]	Output meter across voice coil.	L_8 (LW OSC Coil) (＊1) L_5 (LW ANT Coil)	Adjust for maximum output. Adjust L_5 by moving coil bobbin along ferrite core.
(3)	LW	〃	285 kHz	285 kHz [142.5mm(5 5/8")]	〃	C_{34} (LW OSC Trimmer) C_{22} (LW ANT Trimmer)	Adjust for maximum output. Repeat steps (2) and (3).
	(＊1) Cement antenna bobbin with wax after completing alignment.						
			MW-RF ALIGNMENT				
(4)	MW	〃	550 kHz	550 kHz [17.5mm(11/16")]	Output meter across voice coil.	L_9 (MW OSC Coil) (＊2) L_6 (MW ANT Coil)	Adjust for maximum output. Adjust L_6 by moving coil bobbin along ferrite core.
(5)	MW	〃	1,500 kHz	1,500 kHz [141mm(5 9/16")]	〃	C_{36} (MW OSC Trimmer) C_{25} (MW ANT Trimmer)	Adjust for maximum output. Repeat steps (4) and (5).
	(＊2) Cement antenna bobbin with wax after completing alignment.						
			SW-RF ALIGNMENT				
(6)	SW	Connect to test point ▼1 through ceramic capacitor (10PF).	5.9 MHz	5.9 MHz [6mm (1/4")]	Output meter across voice coil.	L_{10} (SW OSC Coil) L_7 (SW ANT Coil)	Adjust for maximum output.
(7)	SW	Negative side to test point ▼E1.	18 MHz	18 MHz [151mm (5 15/16")]	〃	C_{17} (SW OSC Trimmer)	Adjust for maximum output. Repeat steps (6) and (7).

FM IF ALIGNMENT

	BAND	SIGNAL GENERATOR or SWEEP GENERATOR: CONNECTIONS	SIGNAL GENERATOR or SWEEP GENERATOR: FREQUENCY	RADIO DIAL SETTING	INDICATOR (VTVM or SCOPE)	ADJUSTMENT	REMARKS
(1)	FM	Connect to test point ▼2 through 0.001μF. Negative side to point ▼E2.	10.7 MHz	Point of non-interference.	Connect vert. amp of scope to test point ▼3. Negative side to test point ▼E2.	T_1 (FM 1st)	Adjust for maximum amplitude. (Refer to Fig. 9.)
(2)	FM	〃	〃	〃	〃	T_3 (FM 2nd)	Adjust for maximum amplitude. (Refer to Fig. 10.)

FM RF ALIGNMENT

	BAND	SIGNAL GENERATOR or SWEEP GENERATOR: CONNECTIONS	SIGNAL GENERATOR or SWEEP GENERATOR: FREQUENCY	RADIO DIAL SETTING	INDICATOR (VTVM or SCOPE)	ADJUSTMENT	REMARKS
(1)	FM	Connect to test point ▼1 through FM dummy antenna. (Refer to Fig. 11.)	87.5 MHz	Variable capacitor fully closed.	Output meter across voice coil.	L_3 (FM OSC Coil)	(＊3) Adjust for maximum output.
(2)	FM		90 MHz	90 MHz [21mm(27/32")]	〃	L_1 (FM TUNE Coil)	(＊3) Adjust for maximum output.
(3)	FM		106 MHz	106 MHz [130mm(5 1/8")]	〃	C_{14} (FM OSC Trimmer) C_5 (FM TUNE Trimmer)	(＊3) Adjust for maximum output. Repeat steps. (1)～(3).
	(＊3) Three output responses will be present; proper tuning is the center frequency.						

SCHEMATIC DIAGRAM MODEL RF-1405LBS

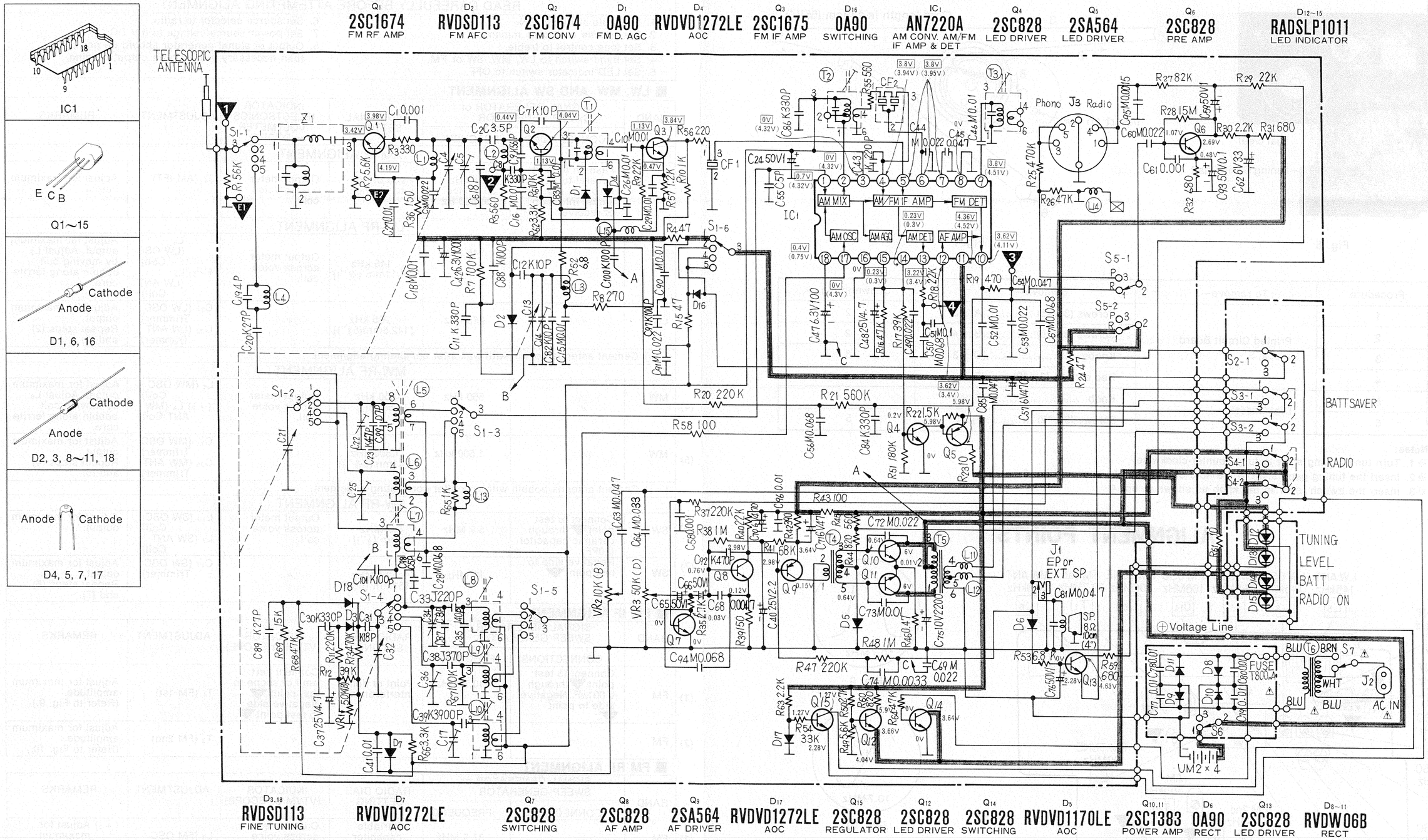

Notes:

1. S_{1-1}~S_{1-6}: Band switch in "FM" position. (1...FM, 2...LW, 4...MW, 5...SW)
2. S_{2-1}, S_{2-2}: LED switch in "ON" position. (1...ON, 3...OFF)
3. S_{3-1}, S_{3-2}: Battery saver switch in "ON" position. (1...ON, 3...OFF)
4. S_{4-1}, S_{4-2}: Power switch in "ON" position. (1...ON, 3..⏻)
5. S_{5-1}, S_{5-2}: Radio/Phono switch in "RADIO" position. (1...RADIO, 3...PHONO)
6. S_6: AC/DC select switch in "DC" position.
7. S_7: Voltage selector.
8. DC voltage measurements are taken with electronics voltmeter from negative terminal of battery. ▭...FM position, ( )...AM position.
9. Battery current: No signal 38mA
   Maximum output 700mA
10. ⚠ indicates that only parts specified by the manufacture be used for safety.
11. The mark (▼) shows test point. e.g. ▼1 = test point 1.

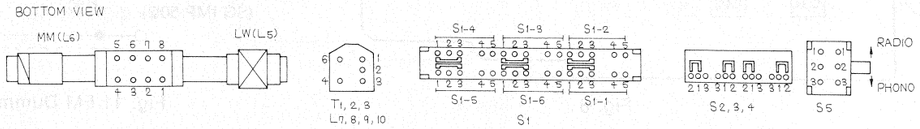

CIRCUIT BOARD WIRING VIEW MODEL RF-1405LBS

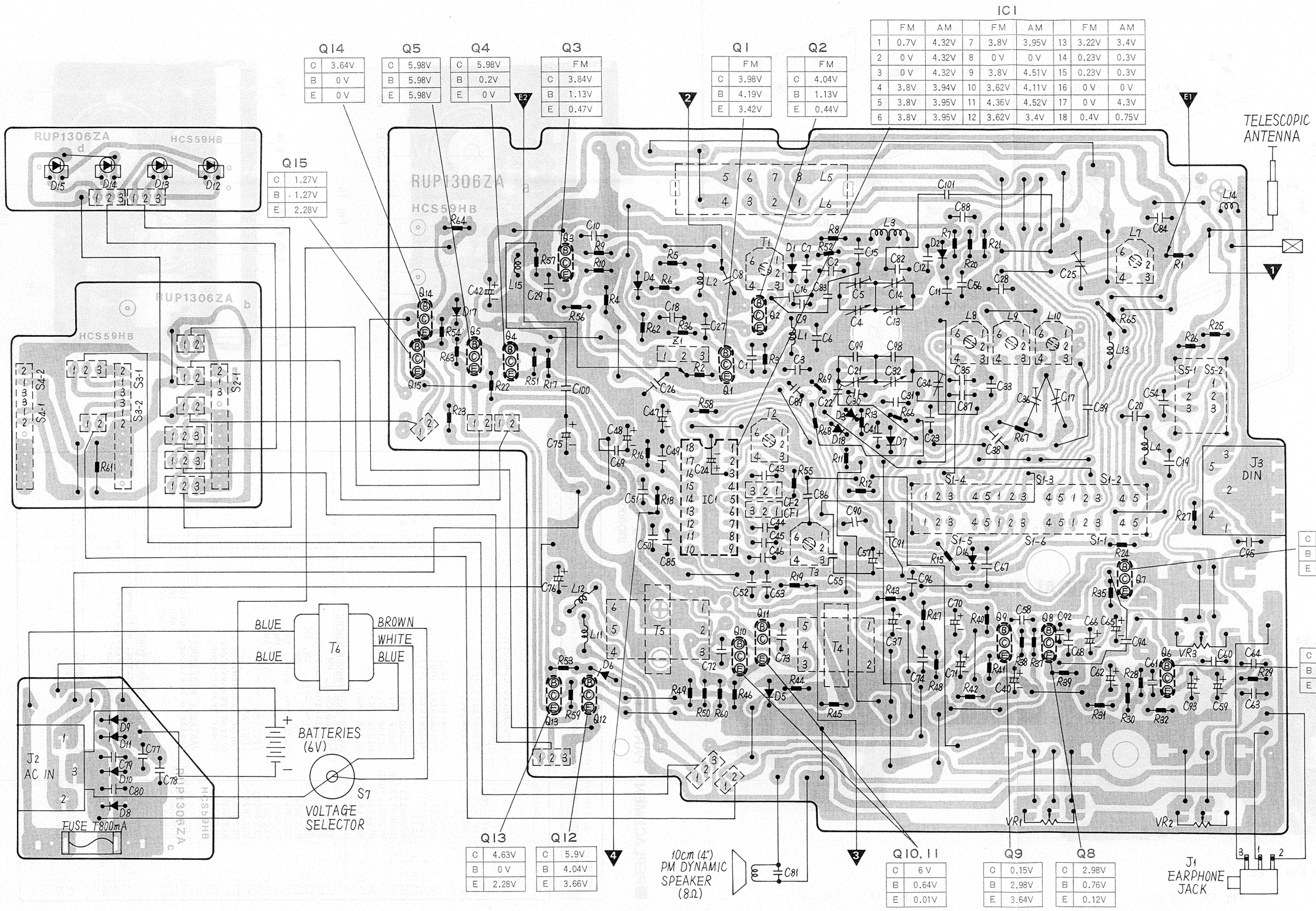

IC1

	FM	AM		FM	AM		FM	AM
1	0.7V	4.32V	7	3.8V	3.95V	13	3.22V	3.4V
2	0 V	4.32V	8	0 V	0 V	14	0.23V	0.3V
3	0 V	4.32V	9	3.8V	4.51V	15	0.23V	0.3V
4	3.8V	3.94V	10	3.62V	4.11V	16	0 V	0 V
5	3.8V	3.95V	11	4.36V	4.52V	17	0 V	4.3V
6	3.8V	3.95V	12	3.62V	3.4V	18	0.4V	0.75V

Q14

C	3.64V
B	0 V
E	0 V

Q5

C	5.98V
B	5.98V
E	5.98V

Q4

C	5.98V
B	0.2V
E	0 V

Q3

	FM
C	3.84V
B	1.13V
E	0.47V

Q1

	FM
C	3.98V
B	4.19V
E	3.42V

Q2

	FM
C	4.04V
B	1.13V
E	0.44V

Q15

C	1.27V
B	1.27V
E	2.28V

Q7

C	0.03V
B	0 V
E	0 V

Q6

C	2.69V
B	1.07V
E	0.48V

Q13

C	4.63V
B	0 V
E	2.28V

Q12

C	5.9V
B	4.04V
E	3.66V

Q10, 11

C	6 V
B	0.64V
E	0.01V

Q9

C	0.15V
B	2.98V
E	3.64V

Q8

C	2.98V
B	0.76V
E	0.12V

RF-1405LBS

CABINET PARTS

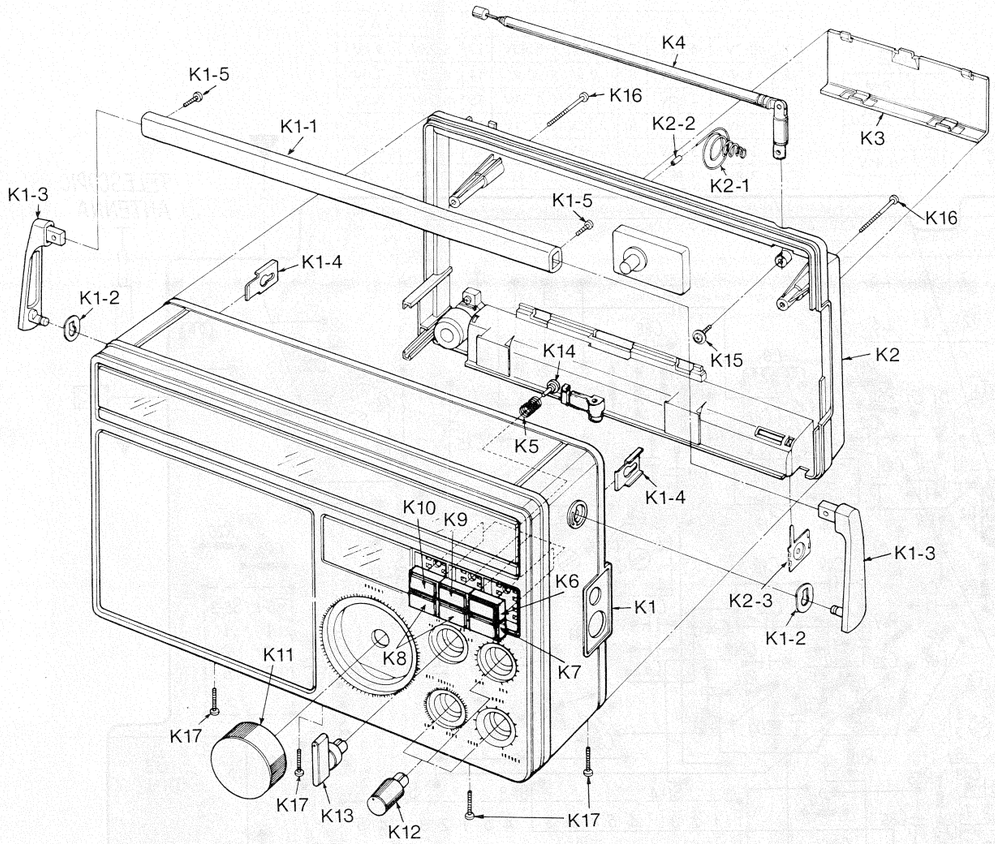

Fig. 12

ELECTRICAL PARTS

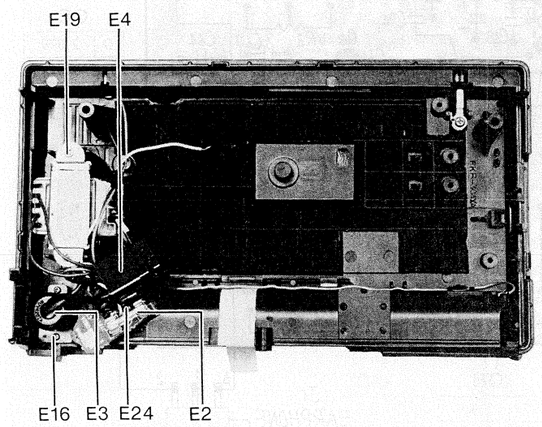

Fig. 13

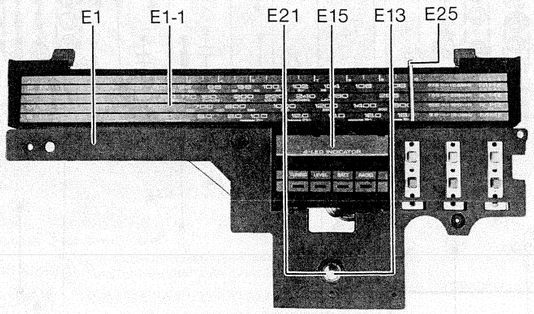

Fig. 14

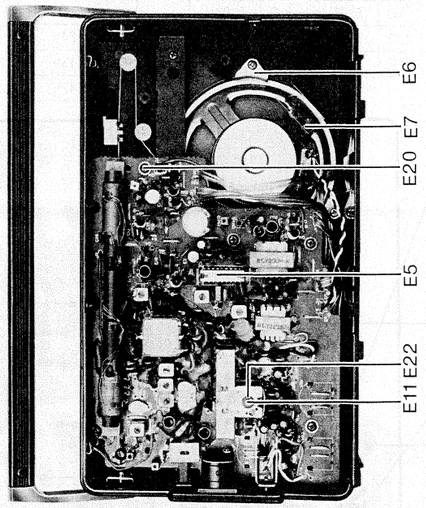

Fig. 15

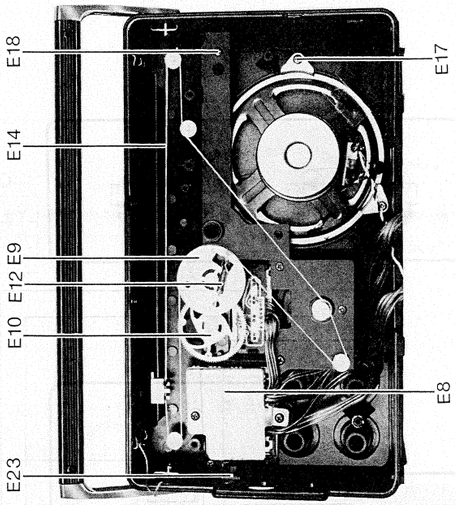

Fig. 16

■REPLACEMENT PARTS LIST·····Model RF-1405LBS
(RD8007-1803C)

NOTES: 1. ⚠ indicates that only parts specified by the manufacturer be used for safety.
2. The S mark indicates service standard parts and may differ from production parts.

Ref. No.	Part No.	Part Name & Description	Per Set	Remarks
		INTEGRATED CIRCUIT, TRANSISTORS AND DIODES		
IC1	AN7220A	IC	1	
Q1,2	2SC1674	Transistor (Si)	2	
Q3	2SC1675	Transistor (Si)	1	
Q4,6,7,8,12~15	2SC828	Transistor (Si)	8	
Q5,9	2SA564	Transistor (Ge)	2	
Q10,11	2SC1383	Transistor (Si)	2	
D1,6,16	OA90	Diode (Ge)	3	S
D2,3,18	RVDSD113	Diode (Si)	3	S
D4,7,17	RVDVD1272LE	Diode (Si)	3	
D5	RVDVD1170LE	Diode (Si)	1	
D8~11	RVDW06B	Diode (Si)	4	
D12~15	RADSLP1011	Diode (Ga)	1	
		COILS AND TRANSFORMERS		
L1	RLD4Y44	Tuning Coil, FM	1	
L3	RLO4Y43	Oscillator Coil, FM	1	
L5,6	RLF6E10	Antenna Coil, LW, MW	1	
L7	RLA3M10	" SW	1	
L8	RLO1M4	Oscillator Coil, LW	1	
L9	RLO2M6	" MW	1	
L10	RLO3M31	" SW	1	
T1,3	RLI4M101	IFT, FM	2	S
T2	RLI2M213	IFT, AM	1	
T4	RLT3F33	Input Transformer	1	
T5	RLT2G28	Output Transformer	1	
T6	RLT5J269	Power Transformer	1	⚠
		VARIABLE RESISTORS		
VR1	EVHOXAF20B54	Variable Resistor, 50kΩ (B)	1	
VR2	EVHOXAF20B14	" 10kΩ (B)	1	
VR3	EVHOXAF20D54	" 50kΩ (D)	1	
		VARIABLE CAPACITORS		
C3,4,21,32	RCV4RC2VLL	Tuning Capacitor, w/Trimmer Capacitor (C5,14,22,34)	1	
C25	RCV1T-16M	Trimmer Capacitor	1	
C17,36	RCV2T-16M	"	1	
		CERAMIC FILTERS		
CF1	RVFSFE107MSR	Ceramic Filter	1	
CF2	RVFCFM2455D	"	1	

Ref. No.	Part No.	Part Name & Description	Per Set	Remarks
		COMPONENT COMBINATION		
Z1	RXABPWB5	Component Combination	1	
		SPEAKER		
	EAS10P182S	Speaker, 10cm (4"), 8Ω	1	
		SWITCHES		
S1	RSR4F02Z	Switch, Band	1	
S2∿S4	RSHX028Z	" LED, BATT SAVE, RADIO	3	
S5	TSE346	" Radio/Phono	1	
S7	RSR2A01Y	" Voltage Selector	1	⚠
		JACKS		
J1	RJJ32E	Jack, Earphone	1	S
J2	RJJ115Z	" AC IN	1	⚠
J3	RJS15A	" Din	1	
		RESISTORS (Value is in OHMS)		
R2,49	ERD25TJ562	5.6 k 1/4W Carbon	2	S
R1	ERD25TJ563	56 k " "	1	S
R18	ERD25TJ222	2.2 k " "	1	S
R4,15,24	ERD25TJ470	47 " "	3	S
R53	ERD25TJ682	6.8 k " "	1	S
R23,61	ERD25TJ100	10 " "	2	S
R52	ERD25TJ6R8	6.8 " "	1	S
R43,58	ERD25TJ101	100 " "	2	S
R36,39	ERD25TJ151	150 " "	2	S
R8	ERD25TJ271	270 " "	1	S
R3	ERD25TJ331	330 " "	1	S
R42	ERD25TJ391	390 " "	1	S
R19	ERD25TJ471	470 " "	1	S
R5,45,55	ERD25TJ561	560 " "	3	S
R31,32, 59	ERD25TJ681	680 " "	3	S
R44,60	ERD25TJ821	820 " "	2	S
R56	ERD25TJ221	220 " "	1	S
R57	ERD25TJ122	1.2 k " "	1	S
R10,65	ERD25TJ102	1 k " "	2	S
R30,40, 63	ERD25TJ222	2.2 k " "	3	S
R35,50	ERD25TJ272	2.7 k " "	2	S
R62,66	ERD25TJ332	3.3 k " "	2	S
R6	ERD25TJ103	10 k " "	1	S
R22,69	ERD25TJ153	15 k " "	2	S
R12,17	ERD25TJ393	39 k " "	2	S
R16,26,64,68	ERD25TJ473	47 k " "	4	S
R41	ERD25TJ683	68 k " "	1	S
R27	ERD25TJ823	82 k " "	1	S
R9,29	ERD25TJ223	22 k " "	2	S
R54	ERD25TJ333	33 k " "	1	S
R7,67	ERD25TJ104	100 k " "	2	S
R51	ERD25TJ184	180 k " "	1	S
R11,20,37,47	ERD25TJ224	220 k " "	4	S

. Ref. No.	Part No.	Part Name & Description	Per Set	Remarks
R13,25	ERD25TJ474	470 k 1/4W Carbon	2	S
R21	ERD25TJ564	560 k " "	1	S
R38,48	ERD25TJ105	1 M " "	2	S
R28	ERD25TJ155	1.5 M " "	1	
R46	ERX1ANJR47	0.47 1W Metal	1	S
		CAPACITORS (Value is in MICRO FARADS except P.P=PICO FARADS)		
C19	ECCD1H040C	4 P 50V Ceramic	1	
C55,98	ECCD1H050CC	5 P " "	2	
C7,12,82	ECCD1H100KC	10 P " "	3	
C20,89	ECCD1H270KC	27 P " "	2	
C43	ECCD1H221K	220 P " "	1	
C8,11,30,84,86	ECCD1H331K	330 P " "	5	
C99	ECCD1H070DC	7 P " "	1	
C9	ECCD1H560KC	56 P " "	2	
C2	ECCD1H3R5C	3.5 P " "	1	
C23	ECCD1H470KC	47 P " "	1	
C92	ECCD1H471KB	470 P " "	1	
C6,31	ECCD1H180KC	18 P " "	2	
C87	ECCD1H030C	3 P " "	1	
C88,97,100,101	ECCD1H101K	100 P " "	4	
C92	ECKD1H471KB	470 P " "	1	
C1,58,61	ECKD1H102ZF	0.001 " "	3	
C10,15,16,18,26, 29,46,52,83,90	ECKD1H103MD	0.01 " "	10	
C74	ECKD1H332MD	0.0033 " "	1	
C49	ECKD1H223ZF	0.022 " "	1	
C68	ECKD1H472MD	0.0047 " "	1	
C27,41,77∿80,96	ECKD1H103ZF	0.01 " "	7	
C95	ECKD1H152MD	0.0015 " "	1	
C38	ECQS05371JZ	370 P " Styrol	1	
C39	ECQS05392KZ	3900 P " "	1	
C33	ECQS05221JZ	220 P " "	1	
C35	ECQS05141JZ	140 P " "	1	
C73	ECFVD103MD	0.01 25V Semi-Conductor	1	
C3,53,60,69,72,91	ECFVD223MD	0.022 " "	6	
C45,54,63,81,85	ECFVD473MD	0.047 " "	5	
C28,50,56,67,94	ECFVD683MD	0.068 " "	5	
C51	ECFVD104MD	0.1 " "	1	
C44	ECFVD153MD	0.015 " "	1	
C64	ECFVD333MD	0.033 " "	1	
C62	ECEA1CS330	33 16V Electrolytic	1	S
C71	ECEA1AS470	47 10V "	1	S
C57,70	ECEA0JS471	470 6.3V "	2	S
C47	ECEA1AS101	100 10V "	1	S
C42	ECEA0JS102	1000 6.3V "	1	S
C75	ECEA1CS222	2200 16V "	1	S

Ref. No.	Part No.	Part Name & Description	Per Set	Remarks
C37,48	ECEA25Z4R7	4.7 25V Electrolytic	2	S
C24,59,65,66,76	ECEA50Z1	1 50V "	5	S
C40	ECEA50Z2R2	2.2 " "	1	S
C93	ECEA50ZR1	0.1 " "	1	S
		CABINET PARTS		
K1	RYMF1405LBSX	Front Cabinet Ass'y	1	
K1-1	RKX199Z	Handle	1	
K1-2	RKX184Z	Spacer, Arm	2	
K1-3	RKX204Z	Arm, Handle	2	
K1-4	QBP1817	Stopper, Arm	2	
K1-5	XSB3+6FZ	Screw, Handle M'tg	2	
K2	RYFF1405LBSX	Rear Cabinet Ass'y	1	
K2	RYFF1405LBSF	Rear Cabinet Ass'y, for Itary, France & Finland	1	
K2-1	RJC603Z	Spring, Battery - Side	1	
K2-2	RJT398A	Connecting Pipe	1	
K2-3	RJC205B	Terminal, Battery + Side	1	
K3	RYNF1405LBSX	Battery Cover Ass'y	1	
K4	XEARR170FKY	Telescopic Antenna	1	
K5	RDS5104Z	Spring, Button	6	
K6	RBC279P	Button, Radio On	1	
K7	RBC279Q	Button, Radio Off	1	
K8	RBC279R	" Off	2	
K9	RBC279S	" Batt Saver	1	
K10	RBC279T	" LED On	1	
K11	RBN533Z	Knob Tuning	1	
K12	RBN534Z	" Volume	3	
K13	RBS168Z	" Band	1	
K14	RHR1127Z	Stopper, Button	6	
K15	XTW3+10F	Screw, Telescopic Antenna M'tg	1	
K16	XTB3+45CFN	" , Cabinet M'tg	2	
K17	XTN3+10B	" , "	4	S
		ELECTRICAL PARTS		
E1	RZAF1405LBSX	Dial Chassis Ass'y	1	
E1-1	RKD563Z	Dial Scale	1	
E2	QTF1054	Holder, Fuse	2	⚠
E3	RUV426Z	Cover, Voltage Selector	1	⚠
E4	RUV482Z	Cover, AC IN Jack	1	⚠
E5	RMC607Z	Shield Cover, IC	1	
E6	RMS12B	Bracket, Speaker	3	
E7	RMX198Z	Insulator	1	
E8	RMX183Z	Insulator	1	
E9	RDD3383Z	Drum, Dial	1	
E10	RDG5694Z	Gear, Dial	1	
E11	RDF864Z	Shaft, Band Switch	1	
E12	RDS4090A	Spring, Dial	1	
E13	RDT2252Z	Shaft, Tuning	1	
E14	RDZ05Z	Cord, Dial	1 ROLL	
E15	RGK957Z	Indicating Plate, LED	1	
E16	XTN23+8B	Screw, Voltage Selector M'tg	2	S

Ref. No.	Part No.	Part Name & Description	Per Set	Remarks
E17	XTN3+10B	Screw, Speaker M'tg	3	S
E18	XTN3+12B	" Chassis M'tg	5	S
E19	XTW3+16F	" Transformer M'tg	2	
E20	XTW3+12FR	Red Screw, PC Board M'tg	6	
E21	XNS9	Nut, Tuning Shaft M'tg	1	S
E22	XUC25FT	Circlip	1	S
E23	RBD122Z	Knob, Radio/Phono	1	
E24	XBA2C05TRO	Fuse, T500mA	1	⚠
E25	RDP813Z	Pointer, Dial	1	
		ACCESSORIES		
	XEH1A1-P	Magnetic Earphone	1	S
	RJA20Z	Power Cord, AC	1	S ⚠
	RQE13Z	Caution Tag	1	
		PACKING MATERIALS		
	XZB40X30A04	Polyethylene Cover	1	S
	XZB10X25A04	"	1	S
	RPN9347Z	Pad Complete	1	
	RPK984Z	Gift Box	1	
		PRINTED MATERIALS		
	RQX6597Z	Instruction Book	1	
	RQX6619Z	Instruction Book, for Itary	1	

ORDER NO. RD83072086S2

475

Service Manual

Radio

Supplement - 1

FM/LW/MW/SW 4-BAND
PORTABLE RADIO

RF-1405LBS

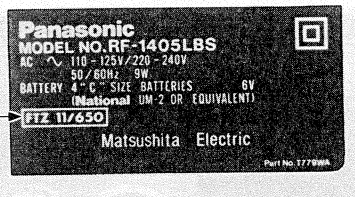

FTZ No.

- Printed Circuit Board has been changed since July, 1983 to meet new FTZ regulation.
- Please use this manual for model RF-1405LBS which has FTZ No. on the name plate as shown figure left.

SPECIFICATIONS

Frequency Range:	FM 87.5~108 MHz LW 150~285 kHz (2000~1060m) MW 520~1610 kHz (577~186m) SW 5.9~18 MHz (50.8~16.7m)
Intermediate Frequency:	FM 10.7 MHz AM (LW, MW & SW) 455 kHz
Sensitivity:	FM 1.8μV (−10 dB Limit Sens) LW 100μV/m for 50 mW Output MW 40μV/m for 50 mW Output SW 3.5μV for 50 mW Output
Power Source:	AC 110~125/220~240 V 50/60 Hz or DC 6 V (Four "C" Size Flashlight Batteries) (National UM-2 or equivalent)
Power Consumption:	9 W (AC Only)
Power Output:	2 W (DC Max) 2 W (MPO)
Speaker:	10 cm (4"), 8Ω PM Dynamic Speaker
Dimensions:	266 (Wide)×158 (High)×80 (Deep) mm ($10\frac{1}{2}$"×$6\frac{1}{4}$"×$3\frac{3}{16}$")
Weight:	3 lb. 8.4 oz. (1.6 kg) without batteries
Impedance:	Speaker.....8Ω Earphone Jack.....8Ω

Specifications are subject to change without notice.

Panasonic

Matsushita Electric Trading Co., Ltd.
P.O. Box 288, Central Osaka Japan

475

LOCATION OF CONTROLS AND COMPONENTS

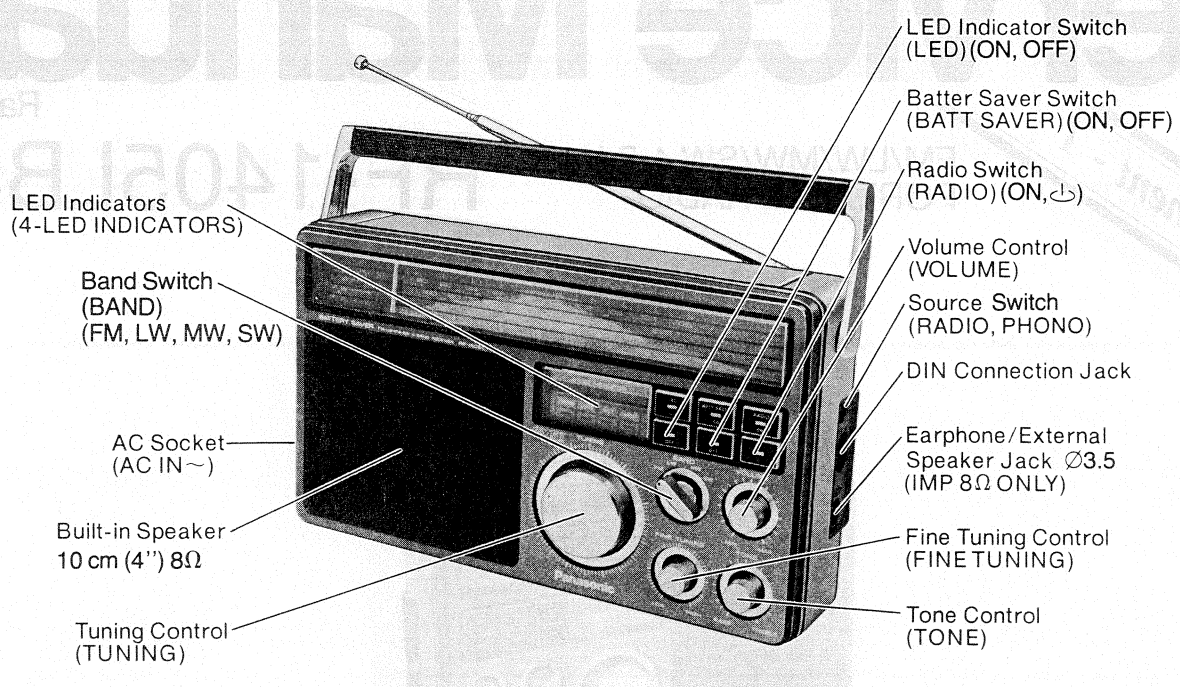

Fig. 1

DISASSEMBLY INSTRUCTIONS

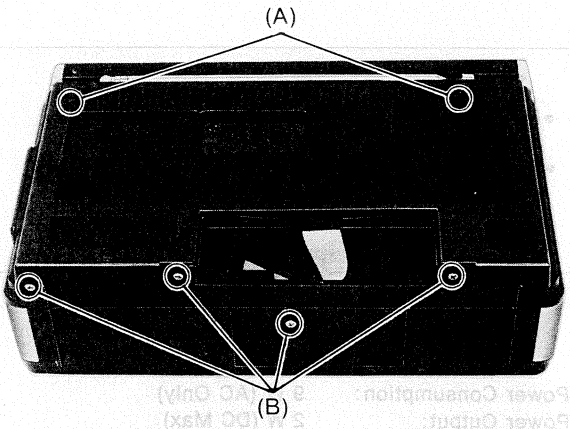

Fig. 2

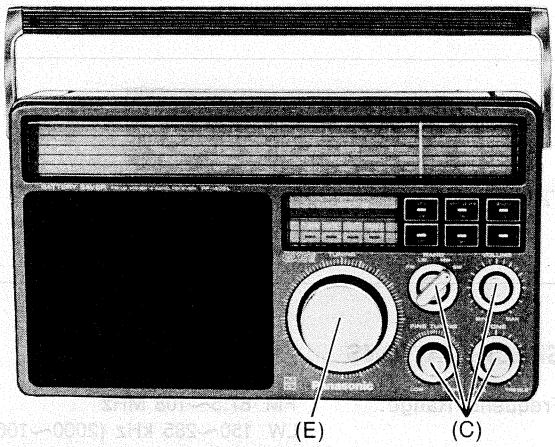

Fig. 3

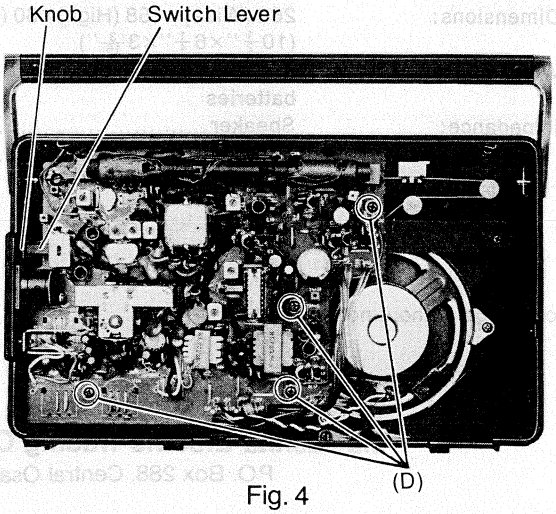

Fig. 4

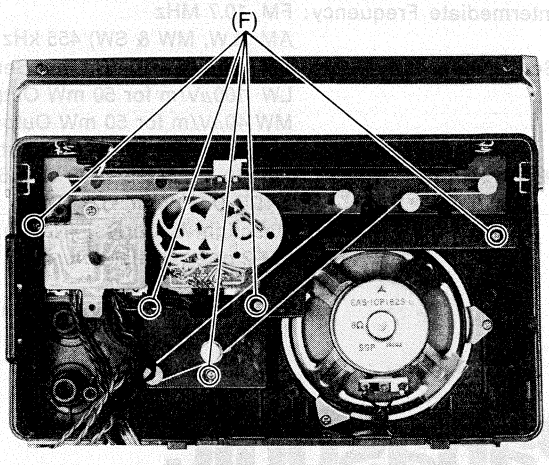

Fig. 5

DIAL THREADING

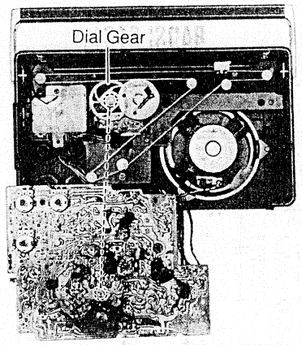

Fig. 6

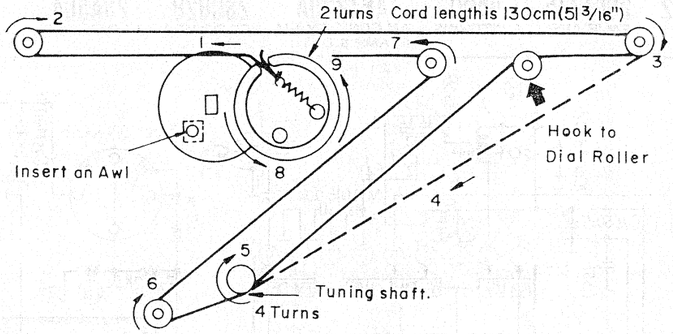

Fig. 7

Procedure	To remove—.	Remove—.	Shown in Fig.—.
1	Printed Circuit Board ※1, 2, 3	Screw (3×45) .....(A)×2	2
2		Screw (3×10) .....(B)×4	2
3		Knob .....(C)×4	3
4		Red screw (3×12) .....(D)×4	4
5	Dial Chassis	Knob .....(E)×1	3
6		Screw (3×12) .....(F)×5	5

Notes:

※1. Turn tuning capacitor shaft to fully counter-clockwise.
※2. Insert the Tuning capacitor shaft in the hole of dial gear as shown in fig. 6.
※3. Insert the switch lever in the knob as shown in fig. 4.

MEASUREMENTS AND ADJUSTMENTS

ALIGNMENT POINTS

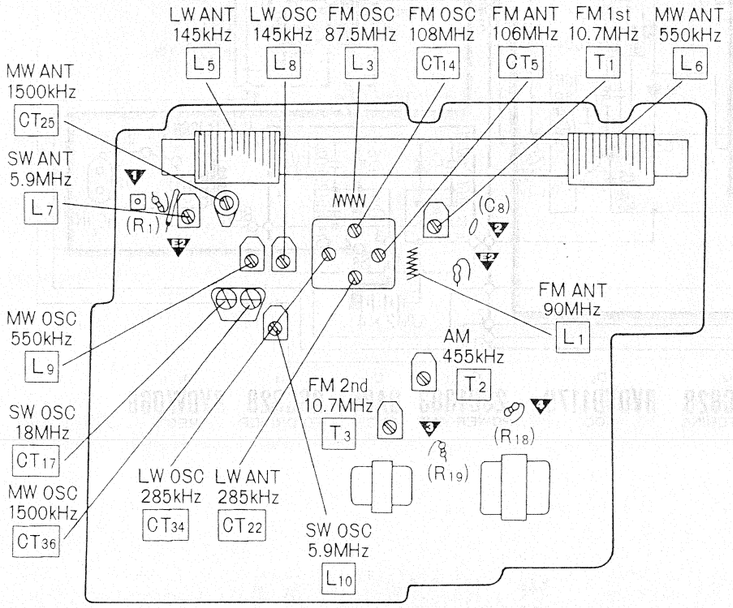

Fig. 8

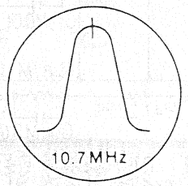

Fig. 9

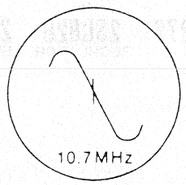

Fig. 10

ALIGNMENT INSTRUCTION

READ CAREFULLY BEFORE ATTEMPTING ALIGNMENT

1. Set radio switch to ON.
2. Set volume control to maximum.
3. Set tone control to treble.
4. Set band switch to LW, MW, SW or FM.
5. Set LED indicator switch to OFF.
6. Set source switch to radio.
7. Set fine tuning to center.
8. Set battery saver switch to OFF.
9. Set power source voltage to 6 V DC.
10. Output of signal generator should be no higher than necessary to obtain an output reading.

LW, MW, AND SW ALIGNMENT

	BAND	SIGNAL GENERATOR or SWEEP GENERATOR: CONNECTIONS	SIGNAL GENERATOR or SWEEP GENERATOR: FREQUENCY	RADIO DIAL SETTING	INDICATOR (ELECTRONICS VOLTMETER or SCOPE)	ADJUSTMENT	REMARKS
		AM-IF ALIGNMENT					
(1)	MW	Fashion loop of several turns of wire and radiate signal into loop of receiver.	455 kHz 30% Mod. at 400 Hz	Point of non-interference.	Output meter across voice coil.	T_2 (AM IFT)	Adjust for maximum output.
		LW-RF ALIGNMENT					
(2)	LW	〃	145 kHz	145 kHz	Output meter across voice coil.	L_8 (LW OSC Coil) (*1) L_5 (LW ANT Coil)	Adjust for maximum output. Adjust L_5 by moving coil bobbin along ferrite core.
(3)	LW	〃	285 kHz	285 kHz	〃	CT_{34} (LW OSC Trimmer) CT_{22} (LW ANT Trimmer)	Adjust for maximum output. Repeat steps (2) and (3).
		MW-RF ALIGNMENT					
(4)	MW	〃	550 kHz	550 kHz	Output meter across voice coil.	L_9 (MW OSC Coil) (*1) L_6 (MW ANT Coil)	Adjust for maximum output. Adjust L_6 by moving coil bobbin along ferrite core.
(5)	MW	〃	1,500 kHz	1,500 kHz	〃	CT_{36} (MW OSC Trimmer) CT_{25} (MW ANT Trimmer)	Adjust for maximum output. Repeat steps (4) and (5).
	(*1) Cement antenna bobbin with wax after completing alignment.						
		SW-RF ALIGNMENT					
(6)	SW	Connect to test point ▼ through ceramic capacitor (10PF). Negative side to test point ▼.	5.9 MHz	5.9 MHz	Output meter across voice coil.	L_{10} (SW OSC Coil) L_7 (SW ANT Coil)	Adjust for maximum output.
(7)	SW		18 MHz	18 MHz	〃	CT_{17} (SW OSC Trimmer)	Adjust for maximum output. Repeat steps (6) and (7).

FM ALIGNMENT

	BAND	SIGNAL GENERATOR or SWEEP GENERATOR: CONNECTIONS	SIGNAL GENERATOR or SWEEP GENERATOR: FREQUENCY	RADIO DIAL SETTING	INDICATOR (ELECTRONICS VOLTMETER or SCOPE)	ADJUSTMENT	REMARKS
		FM-IF ALIGNMENT					
(1)	FM	Connect to test point ▼ through 0.001μF. Negative side to test point ▼.	10.7 MHz	Point of non-interference.	Connect vert. amp of scope to test point ▼. Negative side to test point ▼.	T_1 (FM 1st IFT)	Adjust for maximum amplitude. (Refer to Fig. 9.)
(2)	FM	〃	〃	〃	〃	T_3 (FM 2nd IFT)	Adjust for maximum amplitude. (Refer to Fig. 10.)
		FM-RF ALIGNMENT					
(3)	FM	Connect to test point ▼ through FM dummy antenna. Negative side to test point ▼.	87.5 MHz	Variable capacitor fully closed.	Output meter across voice coil.	L_3 (FM OSC Coil)	(*2) Adjust for maximum output.
(4)	FM		108 MHz	Variable capacitor fully open	〃	CT_{14} (FM OSC Trimmer)	〃
(5)	FM		90 MHz	Tune to signal.	〃	L_1 (FM ANT Coil)	(*2) Adjust for maximum output.
(6)	FM		106 MHz	〃	〃	CT_5 (FM ANT Trimmer)	(*2) Adjust for maximum output. Repeat steps. (3)~(6).
	(*2) Three output responses will be present; proper tuning is the center frequency.						

SCHEMATIC DIAGRAM MODEL RF-1405LBS

Q1	D2	Q2	D1	D4	Q3	D16	IC1	Q4	Q5	Q6	D12~15
2SC1674	RVDSD113	2SC1674	0A90	RVDVD1272	2SC1675	0A90	AN7220A	2SC828	2SA564	2SC828	RADSLP1011
FM RF AMP	FM AFC	FM CONV	FM D. AGC	AOC	FM IF AMP	SWITCHING	AM CONV. AM/FM IF AMP & DET	LED DRIVER	LED DRIVER	PRE AMP	LED INDICATOR

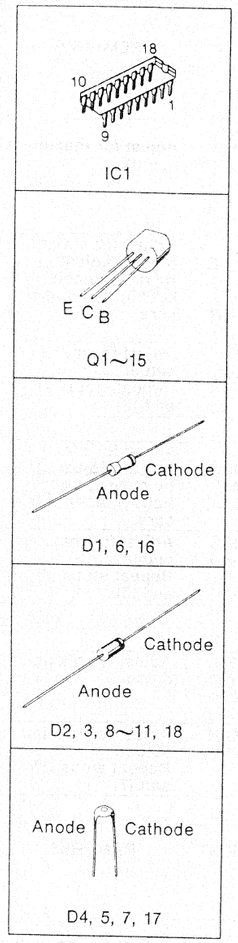

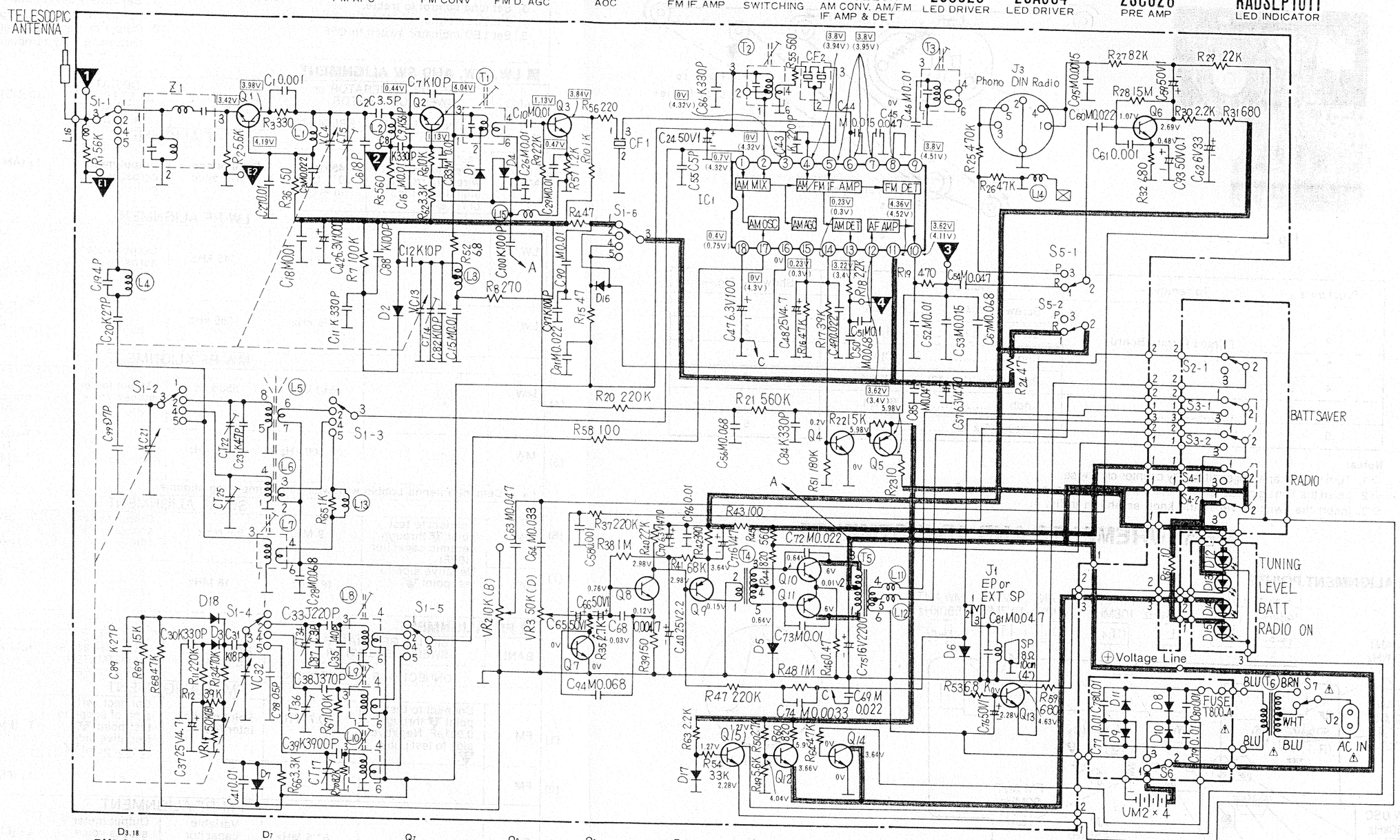

D3,18	D7	Q7	Q8	Q9	D17	Q15	Q12	Q14	D5	Q10,11	D6	Q13	D8~11
RVDSD113	RVDVD1272	2SC828	2SC828	2SA564	RVDVD1272	2SC828	2SC828	2SC828	RVDVD1170	2SC1383	0A90	2SC828	RVDW06B
FINE TUNING	AOC	SWITCHING	AF AMP	AF DRIVER	AOC	REGULATOR	LED DRIVER	SWITCHING	AOC	POWER AMP	RECT	LED DRIVER	RECT

Notes:

1. S_{1-1}~S_{1-6}: Band switch in "FM" position. (1...FM, 2...LW, 4...MW, 5...SW)
2. S_{2-1}, S_{2-2}: LED Indicator switch in "ON" position. (1...ON, 3...OFF)
3. S_{3-1}, S_{3-2}: Battery saver switch in "ON" position. (1...ON, 3...OFF)
4. S_{4-1}, S_{4-2}: Radio switch in "ON" position. (1...ON, 3..⏻)
5. S_{5-1}, S_{5-2}: Source switch in "RADIO" position. (1...RADIO, 3...PHONO)
6. S_6: AC/DC select switch in "DC" position.
7. S_7: Voltage selector.
8. DC voltage measurements are taken with electronics voltmeter from negative terminal of battery. ▭...FM position, ( )...AM position.
9. Battery current: No signal 38mA
   Maximum output 700mA
10. Important safety notice
    Components identified by ⚠ mark have special characteristics important for safety. When replacing any of these components, use only manufacturer's specified parts.
11. The mark (▼) shows test point. e.g. ▼1 = test point 1.

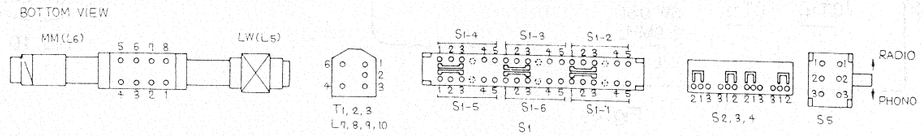

CIRCUIT BOARD AND WIRING CONNECTION DIAGRAM MODEL RF-1405LBS

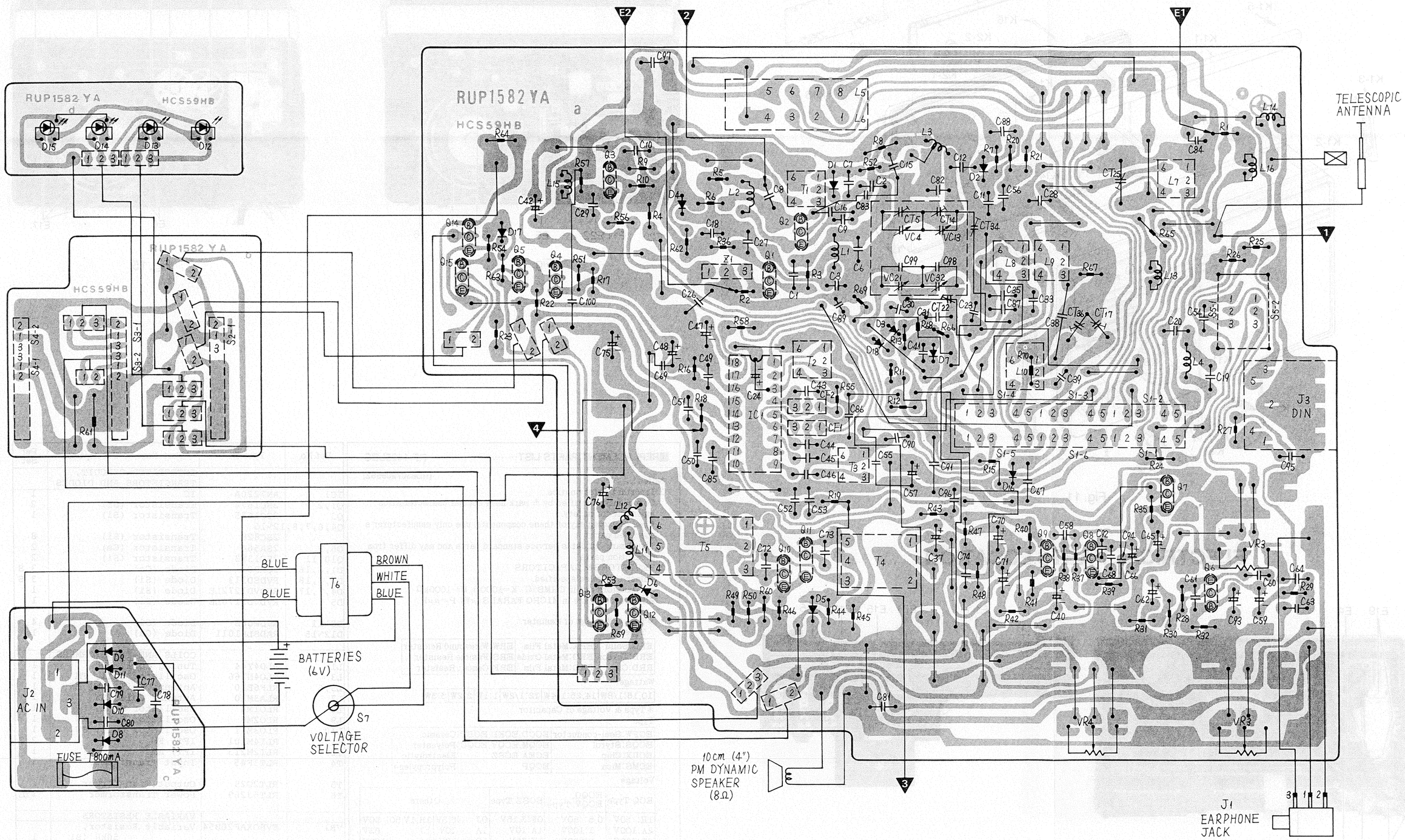

 RF-1405LBS

CABINET PARTS LOCATION

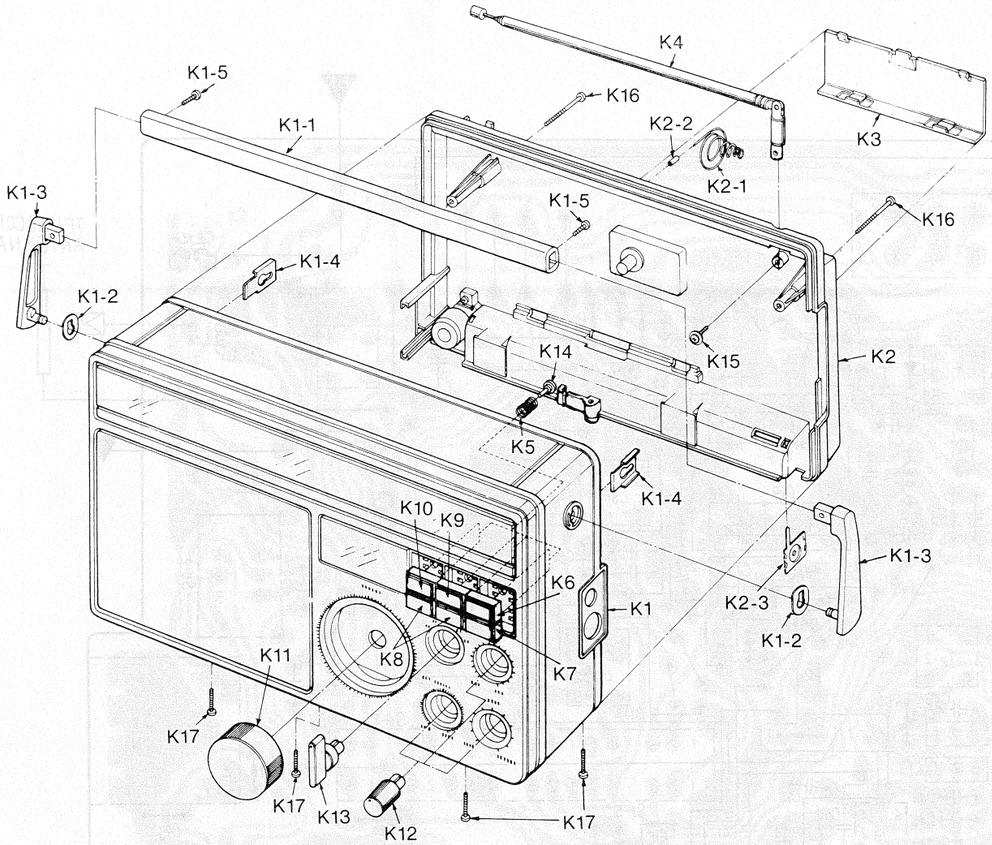

Fig. 11

ELECTRICAL PARTS LOCATION

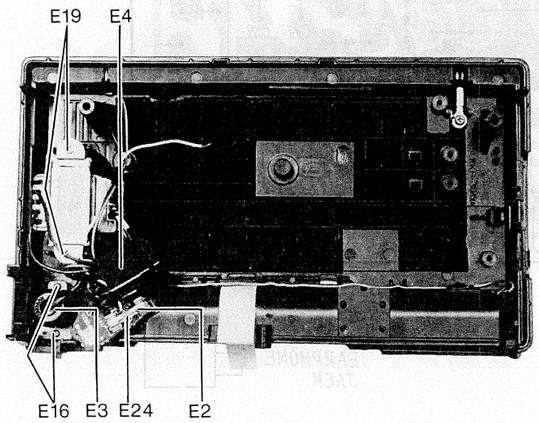

Fig. 12

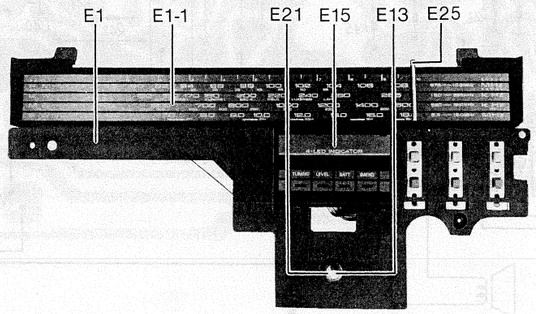

Fig. 13

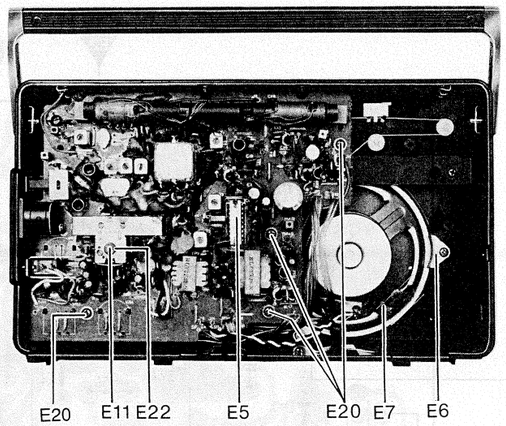

Fig. 14

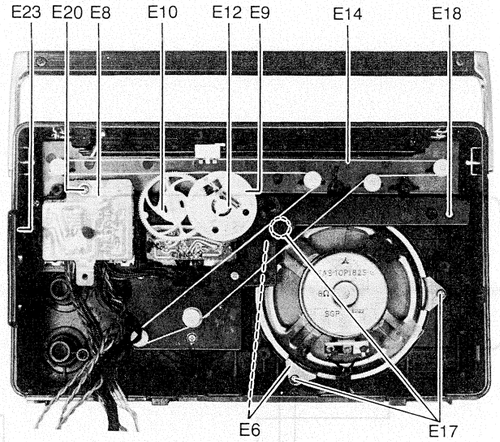

Fig. 15

■REPLACEMENT PARTS LIST RF-1405LBS

(RD83072086S2)

Notes:

1. Important safety notice.
   Components identified by ⚠ mark have special characteristics important for safety.
   When replacing any of these components, use only manufacturer's specified parts.
2. The S mark indicates service standard parts and may differ from production parts.
3. RESISTORS & CAPACITORS
   Unless otherwise specified.
   All resistors are in OHMS (Ω) K=1000Ω, M=1000kΩ
   All capacitors are in MICRO FARADS (μF) P=μμF

*Type & Wattage of Resister

Type

ERC:Solid	ERX:Metal Film	ERW:Wirewound Resister
ERD:Carbon	ERG:Metal Oxide	ERS:Fusible Resister
RRD:Chip	ERO:Metal Film	ERF:Cement Resister

Wattage

10,16:1/8W	14,25:1/4W	12:1/2W	1:1W	2:2W	3:3W

*Type & Voltage of Capacitor

Type

ECFW:Semi-conductor	ECCD,ECKD,ECBT:Ceramic	
ECQS:Styrol	ECQM,ECQV,ECQG:Polyester	
ECUX:Chip	ECEA,ECSZ	:Electrolytic
ECMS:Mica	ECQP	:Polypropylene

Voltage

ECQ Type	ECQG, ECQV, Type	ECSZ Type	Others			
1H: 50V	0,5: 50V	0F:3.15V	0J	:6.3V	1H,1V,50:	50V
2A:100V	1:100V	1A:10V	1A	:10V	1J	: 63V
2E:500V	2:200V	1V:35V	1C	:16V	2A	:100V
2H:500V		0J:6.3V	1E,25:25V			

Ref.No.	Part No.	Part Name & Description	Per Set
		INTEGRATED CIRCUIT, TRANSISTORS AND DIODES	
IC1	AN7220A	IC	1
Q1,2	2SC1674	Transistor (Si)	2
Q3	2SC1675	Transistor (Si)	1
Q4,6,7,8,12~15	2SC828	Transistor (Si)	8
Q5,9	2SA564	Transistor (Ge)	2
Q10,11	2SC1383	Transistor (Si)	2
D1,6,16	2OA90	Diode (Ge)	3 S
D2,3,18	RVDSD113	Diode (Si)	3 S
D4,7,17	RVDVD1272LE	Diode (Si)	1
D5	RVDVD1170LE	Diode (Si)	1
D8~11	RVDW06B	Diode (Si)	4
D12~15	RADSLP1011	Diode (Ga)	1
		COILS AND TRANSFORMERS	
L1	RLD4Y44	Tuning Coil, FM	1
L3	RLO4N166	Oscillator Coil, FM	1
L5,6	RLF6E10	Antenna Coil, LW, MW	1
L7	RLA3M10	Antenna Coil, SW	1
L8	RLO1M4	Oscillator Coil, LW	1
L9	RLO2M6	Oscillator Coil, MW	1
L10	RLO3M31	Oscillator Coil, SW	1
T1,3	RLI4M101	IFT, FM	2 S
T2	RLI2M213	IFT, AM	1
T4	RLT3F45	Input Transformer	1
T5	RLT2G28	Output Transformer	1
T6	RLT5J269	Power Transformer	1⚠
		VARIABLE RESISTORS	
VR1	EVHOXAF20B54	Variable Resistor, 50kΩ (B)	1
VR2	EVHOXAF20B14	Variable Resistor, 10kΩ (B)	1
VR3	EVHOXAF20D54	Variable Resistor, 50kΩ (D)	1

Ref. No.	Part No.	Part Name & Description	Per Set
		VARIABLE CAPACITORS	
VC3,4, 21,32	RCV4RC2V1L	Tuning Capacitor, w/Trimmer Capacitor (CT5,14,22,34)	1
CT25	RCV1T16M	Trimmer Capacitor	1
CT17,36	RCV2T16M	Trimmer Capacitor	2
		CERAMIC FILTERS	
CF1	RVFSFE107MSR	Ceramic Filter	1
CF2	RVFCFM2455D	Ceramic Filter	1
		COMPONENT COMBINATION	
Z1	RXABPWB5	Component Combination	1
		SPEAKER	
	EAS10P182S	Speaker, 10cm (4"), 8Ω	1
		SWITCHES	
S1	RSR4F02Z	Switch, Band	1
S2∿S4	RSHX028Z	Switch, LED, BATT SAVE, RADIO	3
S5	TSE346	Switch, Radio/Phono	1
S7	RSR2A01Y	Switch, Voltage Selector	1 ⚠
		JACKS	
J1	RJJ32E	Jack, Earphone	1 S
J2	RJJ115Z	Jack, AC IN	1 ⚠
J3	RJS15A	Jack, Din	1
		CABINET PARTS	
K1	RYMF1405LBSX	Front Cabinet Ass'y	1
K1-1	RKX199Z	Handle	1
K1-2	RKX184Z	Spacer, Arm	2
K1-3	RKX204Z	Arm, Handle	2
K1-4	QBP1817	Stopper, Arm	2
K1-5	XSB3+6FZ	Screw, Handle M'tg	2
K2	RYFF1405LBSZ	Rear Cabinet Ass'y	1
K2-1	RJC603Z	Spring, Battery - Side	1
K2-2	RJT398A	Connecting Pipe	1
K2-3	RJC205B	Terminal, Battery + Side	1
K3	RYNF1405LBSZ	Battery Cover Ass'y	1
K4	XEARR170FKY	Telescopic Antenna	1
K5	RDS5104Z	Spring, Button	6
K6	RBC279P	Button, Radio On	1
K7	RBC279Q	Button, Radio Off	1
K8	RBC279R	Button, Off	2
K9	RBC279S	Button, Batt Saver On	1
K10	RBC279T	Button, LED On	1
K11	RBN533Z	Knob, Tuning	1
K12	RBN534Z	Knob, Volume etc.	3
K13	RBS168Z	Knob, Band	1
K14	RHR1127Z	Stopper, Button	6
K15	XTW3+10F	Screw, Telescopic Antenna M'tg	1
K16	XTB3+45CFN	Screw, Cabinet M'tg	2
K17	XTN3+10B	Screw, Cabinet M'tg	4 S
		ELECTRICAL PARTS	
E1	RZAF1405LBSZ	Dial Chassis Ass'y	1
E1-1	RKD563W	Dial Scale	1
E2	QTF1054	Holder, Fuse	2 ⚠
E3	RUV426Z	Cover, Voltage Selector	1 ⚠
E4	RUV482Z	Cover, AC IN Jack	1 ⚠
E5	RMC506Z	Shield Cover, IC	1
E6	RMS12B	Bracket, Speaker	3
E7	RMX198Z	Insulator	1
E8	RMX183Z	Insulator	1
E9	RDD3383Z	Drum, Dial	1
E10	RDG5694Z	Gear, Dial	1
E11	RDF864Z	Shaft, Band Switch	1
E12	RDS4090A	Spring, Dial	1
E13	RDT2252Z	Shaft, Tuning	1
E14	RDZ05Z	Cord, Dial	1 ROLL
E15	RGK957Z	Indicating Plate, LED	1

Ref. No.	Part No.	Part Name & Description	Per Set
E16	XTN23+8B	Screw, Voltage Selector M'tg	2 S
E17	XTN3+10B	Screw, Speaker M'tg	3 S
E18	XTN3+12B	Screw, Chassis M'tg	5 S
E19	XTW3+16F	Screw, Transformer M'tg	2
E20	XTW3+12FR	Red Screw, Circuit Board M'tg	6
E21	XNS9	Nut, Tuning Shaft M'tg	1 S
E22	XUC25FT	Circlip	1 S
E23	RBD122Z	Knob, Radio/Phono	1
E24	XBA2C05TRO	Fuse, T500mA	1 ⚠
E25	RDP813Z	Pointer, Dial	1
		ACCESSORIES	
	XEH1A1-P	Magnetic Earphone	1 S
	RJA20Z	Power Cord, AC	1 ⚠ S
	RQE13Z	Caution Tag	1
		PACKING MATERIALS	
	XZB40X39A04	Polyethylene Cover	1 S
	XZB10X25A04	Polyethylene Cover	1 S
	RPN9347Z	Pad Complete	1
	RPK984Z	Gift Box	1
		PRINTED MATERIALS	
	RQX6586Y	Instruction Book	1

Ref. No.	Part No.	Value
	RESISTORS	
R1	ERD25FJ563	56K S
R2	ERD25FJ562	5.6K S
R3	ERD25FJ331	330 S
R4	ERD25FJ470	47 S
R5	ERD25FJ561	560 S
R6	ERD25FJ103	10K S
R7	ERD25TJ104	100K S
R8	ERD25FJ271	270 S
R9	ERD25FJ223	22K S
R10	ERD25FJ102	1K S
R11	ERD25TJ224	220K S
R12	ERD25FJ393	39K S
R13	ERD25TJ474	470K S
R15	ERD25FJ470	47 S
R16	ERD25FJ473	47K S
R17	ERD25FJ393	39K S
R18	ERD25FJ222	2.2K S
R19	ERD25FJ471	470 S
R20	ERD25TJ224	220K S
R21	ERD25TJ564	560K S
R22	ERD25FJ153	15K S
R23	ERD25FJ100	10 S
R24	ERD25FJ470	47 S
R25	ERD25TJ474	470K S
R26	ERD25FJ473	47K S
R27	ERD25TJ823	82K S
R28	ERD25TJ155	1.5M S
R29	ERD25FJ223	22K S
R30	ERD25FJ222	2.2K S
R31	ERD25FJ681	680 S
R32	ERD25FJ681	680 S
R35	ERD25FJ272	2.7K S
R36	ERD25FJ151	150 S
R37	ERD25TJ224	220K S
R38	ERD25TJ105	1M S
R39	ERD25FJ151	150 S
R40	ERD25FJ222	2.2K S
R41	ERD25TJ683	68K S
R42	ERD25FJ391	390 S
R43	ERD25FJ101	100 S
R44	ERD25FJ820	82 S
R45	ERD25FJ561	560 S
R46	ERX1ANJR47	0.47 S
R47	ERD25TJ224	220K S
R48	ERD25TJ105	1M S
R50	ERD25FJ272	2.7K S
R51	ERD25TJ184	180K S
R52	ERD25FJ6R8	6.8 S
R53	ERD25FJ682	6.8K S
R54	ERD25FJ333	33K S
R55	ERD25FJ561	560 S
R56	ERD25FJ221	220 S
R57	ERD25FJ122	1.2K S
R58	ERD25FJ101	100 S
R59	ERD25FJ681	680 S
R60	ERD25FJ821	820 S
R61	ERD25FJ100	10 S
R62	ERD25FJ332	3.3K S
R63	ERD25FJ222	2.2K S
R64	ERD25FJ473	47K S
R65	ERD25FJ102	1K S
R66	ERD25FJ332	3.3K S
R67	ERD25TJ104	100K S
R68	ERD25FJ473	47K S
R69	ERD25FJ153	15K S
R70	ERD25FJ822	8.2K S
	CAPACITORS	
C1	ECKD1H102ZF	0.001
C2	ECCD1H3R5C	3.5P
C3	ECFVD223MD	0.022
C6	ECCD1H180KC	18P
C7	ECCD1H100KC	10P
C8	ECCD1H331K	330P
C9	ECCD1H560KC	560P
C10	ECKD1H103MD	0.01
C11	ECCD1H331K	330P
C12	ECCD1H100KC	10P

Ref. No.	Part No.	Value
C15	ECKD1H103MD	0.01
C16	ECKD1H103MD	0.01
C18	ECKD1H103MD	0.01
C19	ECCD1H040C	4P
C20	ECCD1H270KC	27P
C23	ECCD1H470KC	47P
C24	ECEA50Z1	1 S
C26	ECKD1H103ZF	0.01
C27	ECKD1H103ZF	0.01
C28	ECFVD683MD	0.068
C29	ECKD1H103ZF	0.01
C30	ECCD1H331K	330P
C31	ECCD1H180KC	18P
C33	ECQS05221JZ	220P
C35	ECQS05141JZ	140P
C37	ECEA25Z4R7	4.7 S
C38	ECQS05371JZ	370P
C39	ECQP2A392JZ	0.0039
C40	ECEA50Z2R2	2.2 S
C41	ECKD1H103ZF	0.01
C42	ECEAOJS102	1000 S
C43	ECCD1H221K	220P
C44	ECFVD153MD	0.015
C45	ECFVD333MD	0.033
C46	ECKD1H103MD	0.01
C47	ECEA1AS101	100 S
C48	ECEA25Z4R7	4.7 S
C49	ECKD1H223ZF	0.022
C50	ECFVD683MD	0.068
C51	ECFVD104MD	0.1
C52	ECKD1H103MD	0.01
C53	ECFVD153MD	0.015
C54	ECFVD473MD	0.047
C55	ECCD1H050CC	5P
C56	ECFVD683MD	0.068
C57	ECEAOJS471	470 S
C58	ECKD1H102ZF	0.001
C59	ECEA50Z1	1 S
C60	ECFVD223MD	0.022
C61	ECKD1H102ZF	0.001
C62	ECEA1CS330	33 S
C63	ECFVD473MD	0.047
C64	ECFVD333MD	0.033
C65	ECEA50Z1	1 S
C66	ECEA50Z1	1 S
C67	ECFVD683MD	0.068
C68	ECKD1H472MD	0.0047
C69	ECFVD223MD	0.022
C70	ECEAOJS471	470 S
C71	ECEA1AS470	47 S
C72	ECFVD223MD	0.022
C73	ECFVD103MD	0.01
C74	ECKD1H332MD	0.0033
C75	ECEA1CS222	2200 S
C76	ECEA50Z1	1 S
C77	ECKD1H103ZF	0.01 S
C78	ECKD1H103ZF	0.01 S
C79	ECKD1H103ZF	0.01 S
C80	ECKD1H103ZF	0.01 S
C81	ECFVD473MD	0.047
C82	ECCD1H100KC	10P
C83	ECKD1H103MD	0.01
C84	ECCD1H331K	330P
C85	ECFVD473MD	0.047
C86	ECCD1H331K	330P
C87	ECCD1H030C	3P
C88	ECCD1H101K	100P
C89	ECCD1H270KC	27P
C90	ECKD1H103MD	0.01
C91	ECFVD223MD	0.022
C93	ECEA50ZR1	0.1 S
C94	ECFVD683MD	0.068
C95	ECKD1H152MD	0.0015
C96	ECKD1H103ZF	0.01
C97	ECCD1H101K	100P
C98	ECCD1H050CC	5P
C99	ECCD1H070DC	7P

Ref. No.	Part No.	Value
C100	ECCD1H101K	100P

Ref. No.	Part No.	Value

RD Ⓕ XGZKSN
Printed in Japan